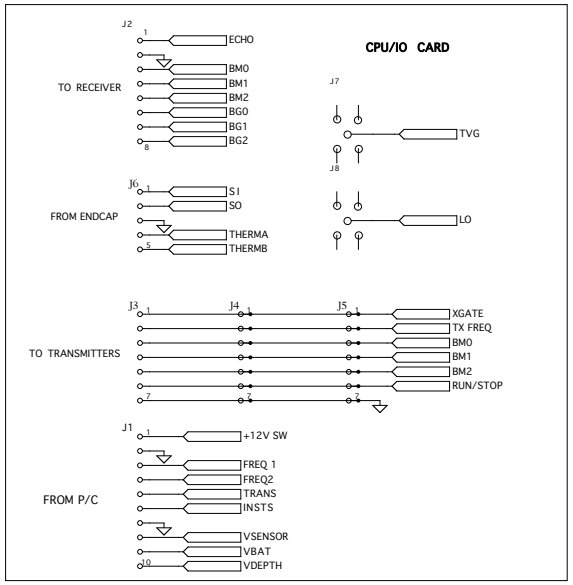

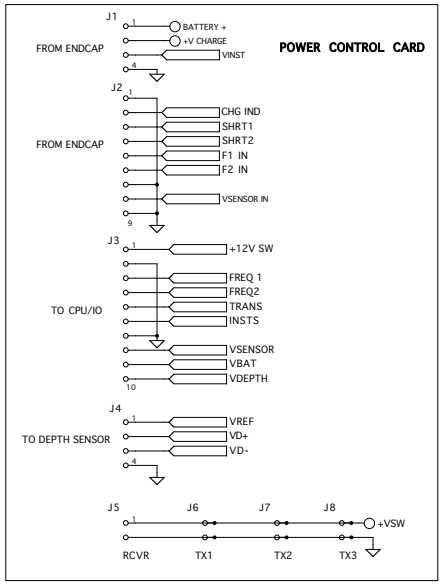

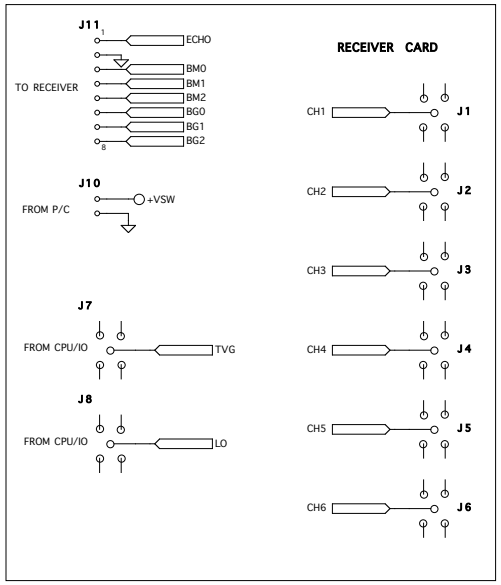

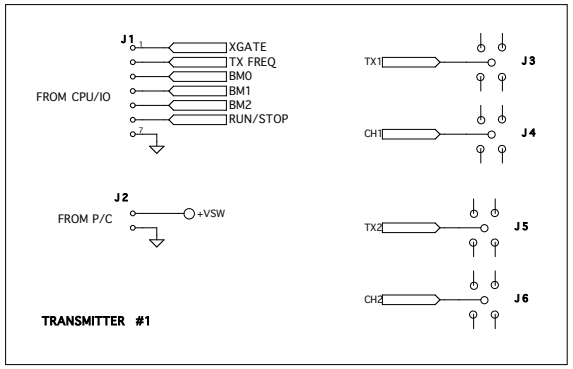

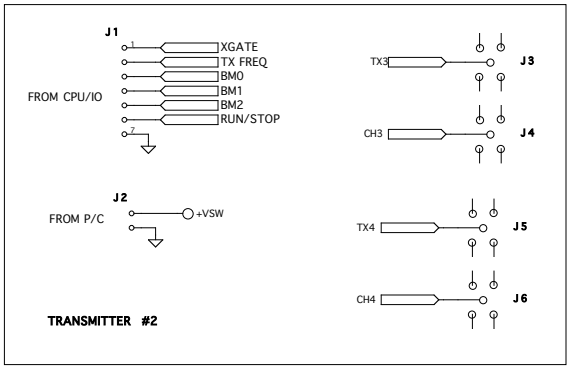

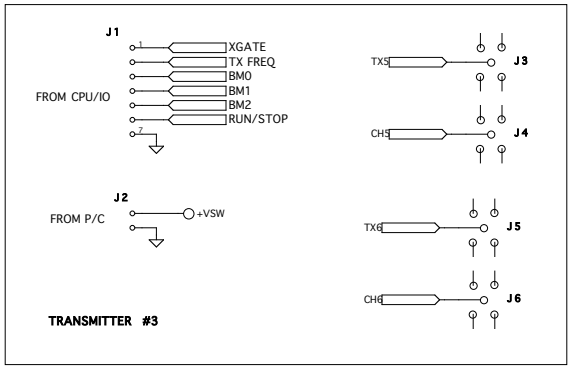

TAPS NG CONNECTORS
2 DEC 2005