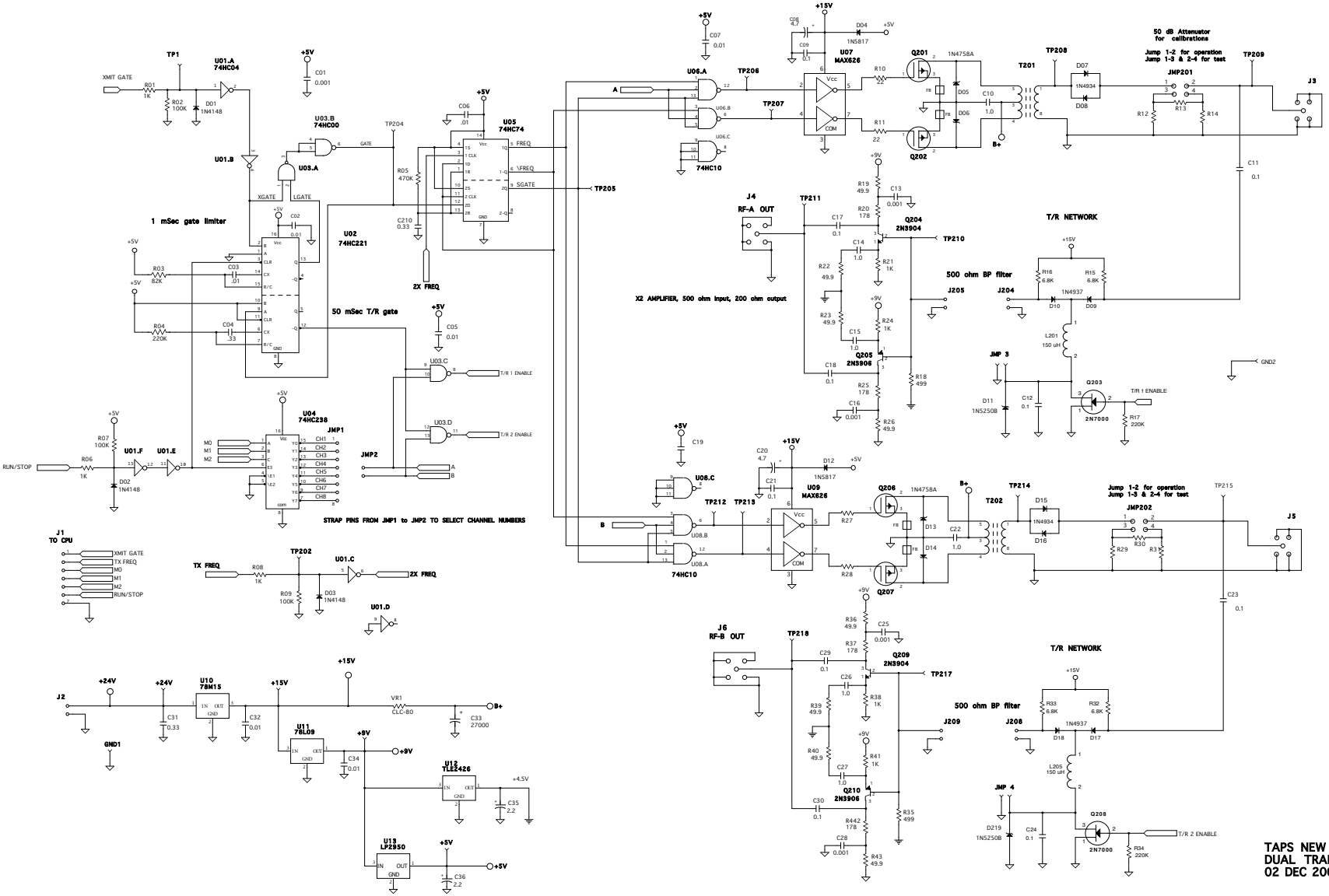
1 mSec gate limiter
50 mSec T/R gate
X2 AMPLIFIER, 500 ohm input, 200 ohm output
STRAP PINS FROM JMP1 to JMP2 TO SELECT CHANNEL NUMBERS
T/R NETWORK
500 ohm BP filter
50 dB Attenuator for calibrations
Jump 1-2 for operation
Jump 1-3 & 2-4 for test
TAPS NEW GENERATION
DUAL TRANSMITTER
02 DEC 2005