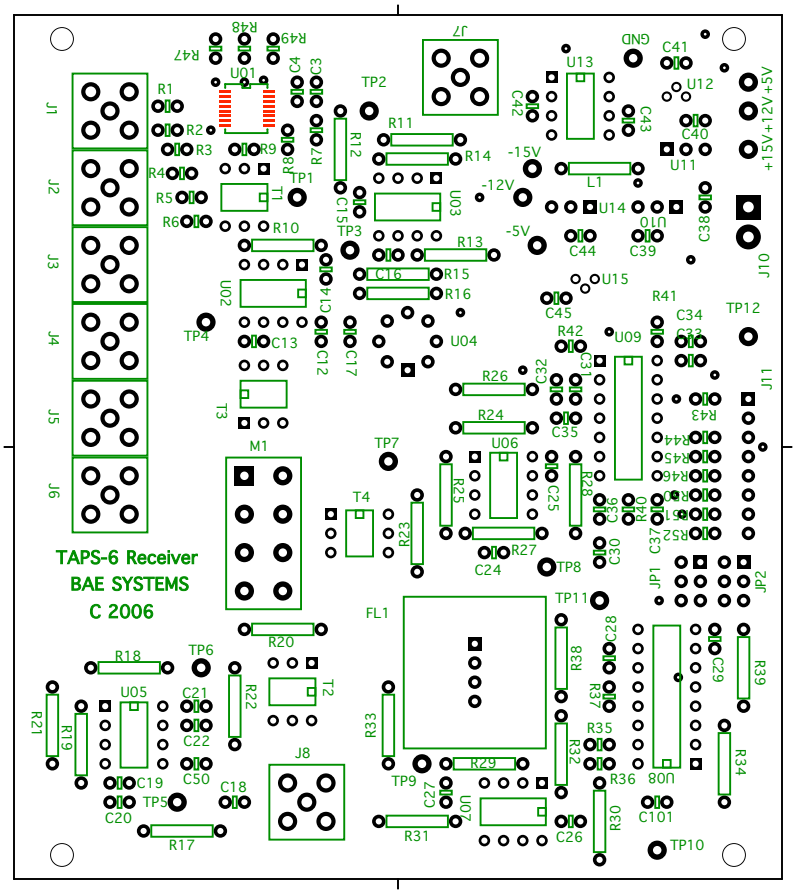

TAPS Receiver
24 Jan 2006

PADS

OUTLINE

SILKSCREEN